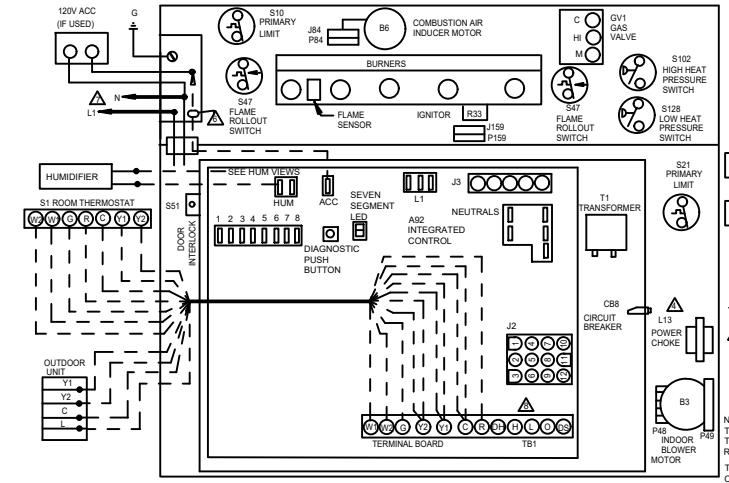

24VAC HUMIDIFIER — TO C; TO R OR H ON CS7000; HUM AT IFC

120VAC HUMIDIFIER — TO N; TO L1; HUM AT IFC

1. CUT W914 JUMPER LABELED DEHUM FROM DS TO R, AT A92 CONTROL BOARD, WHEN USED WITH ComfortSense® 7000 THERMOSTAT
2. CUT W951 JUMPER FROM O TO R, LABELED "HEAT PUMP", AT A92 CONTROL BOARD, WHEN USED FOR DUAL FUEL APPLICATIONS
3. CUT W915 JUMPER LABELED "2 STAGE COMPR." FROM Y1 TO Y2 AT A92 CONTROL WHEN USED WITH A 2 STAGE COOL THERMOSTAT.

JACKPLUG CHART	
J.P48	JACK/PLUG-INDOOR BLOWER-POWER
J.P49	JACK/PLUG-INDOOR BLOWER-SPD TAP
J.P2	JACK/PLUG-BURNER CONTROL
J.P84	JACK/PLUG-COMB AIR INDUCER
J.P3	JACK/PLUG-INDUCER/IGNITER
J.P159	JACK/PLUG-IGNITION

1. L13 USED ON 3/4 AND 1 HP ONLY
2. DIP SWITCH FACTORY DEFAULT IS FOR A TWO STAGE THERMOSTAT
3. FIELD SUPPLIED ACC WIRE
4. USE COPPER CONDUCTORS ONLY
5. DH AND L TERMINALS ARE NOT USED.
6. DO NOT USE RED SPEED TAP FOR HIGH HEAT ON ALL MODELS. DO NOT USE YELLOW SPEED TAP FOR HIGH HEAT ON 070XE36B OR 090XE48C MODELS.

THERMOSTAT HEAT ANTICIPATION SETTING	
.65 AMP	HONEYWELL VALVE
.43 AMP	WHITE RODGERS VALVE

NOTE: SEE INSTALLATION INSTRUCTIONS FOR PROCEDURE TO SET CORRECT BLOWER SPEED FOR SPECIFIC COOLING TONNAGE BEING APPLIED, AND HEATING TEMPERATURE RISE DESIRED.

TYPICAL SYSTEM SHOWN FOR 2 HEAT/2 COOL WITH A CONVENTIONAL THERMOSTAT. SEE INSTALLATION INSTRUCTIONS FOR CONNECTIONS TO OTHER EQUIPMENT AND ACCESSORIES.

HEAT,COOL TWO STAGE

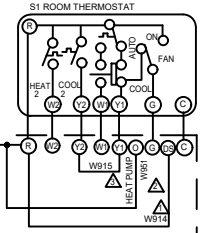

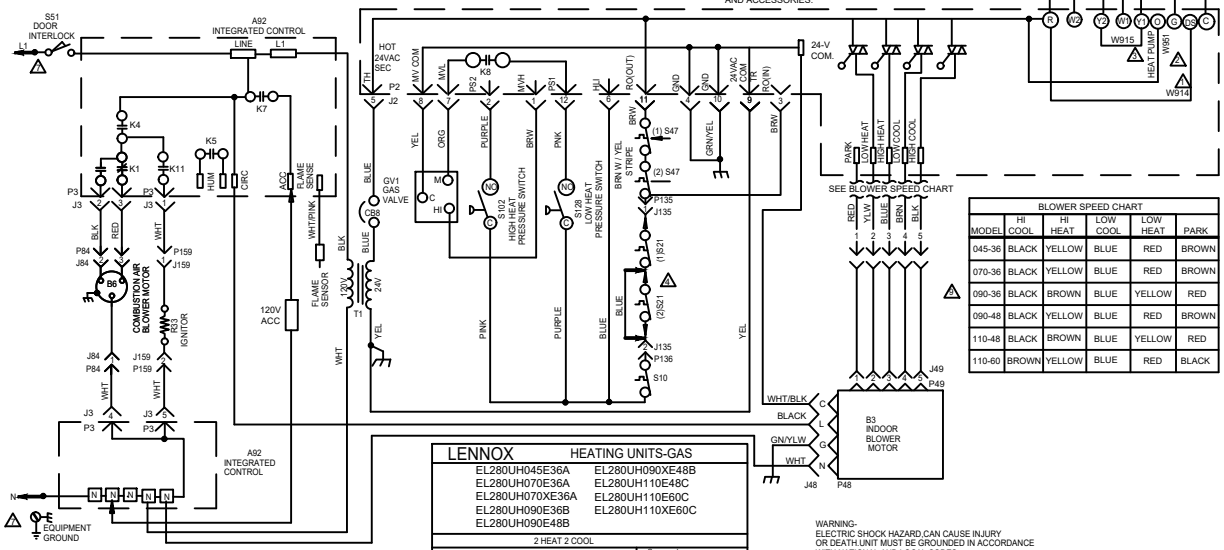

BLOWER SPEED CHART					
MODEL	HI COOL	HI HEAT	LOW COOL	LOW HEAT	PARK
045-36	BLACK	YELLOW	BLUE	RED	BROWN
070-36	BLACK	YELLOW	BLUE	RED	BROWN
090-36	BLACK	BROWN	BLUE	YELLOW	RED
090-48	BLACK	YELLOW	BLUE	RED	BROWN
110-48	BLACK	BROWN	BLUE	YELLOW	RED
110-60	BROWN	YELLOW	BLUE	RED	BLACK

LINE VOLTAGE FIELD INSTALLED
CLASS II VOLTAGE FIELD WIRING
DENOTES OPTIONAL COMPONENTS

LENNOX HEATING UNITS-GAS

EL280UH045E36A
EL280UH070E36A
EL280UH070XE36A
EL280UH090E36B
EL280UH090E48B
EL280UH090XE48B
EL280UH110E48C
EL280UH110E60C
EL280UH110XE60C

2 HEAT 2 COOL

Supersedes

Form No. 538276-01

04/22

© 2011

Litho U.S.A.

WARNING-
ELECTRIC SHOCK HAZARD.CAN CAUSE INJURY OR DEATH.UNIT MUST BE GROUNDED IN ACCORDANCE WITH NATIONAL AND LOCAL CODES.

NOTE-
IF ANY WIRE IN THIS APPLIANCE IS REPLACED,IT MUST BE REPLACED WITH WIRE OF LIKE SIZE, RATING, INSULATION THICKNESS, AND TERMINATION

CUT SIZE: 7-1/4" W x 6.5" Tall