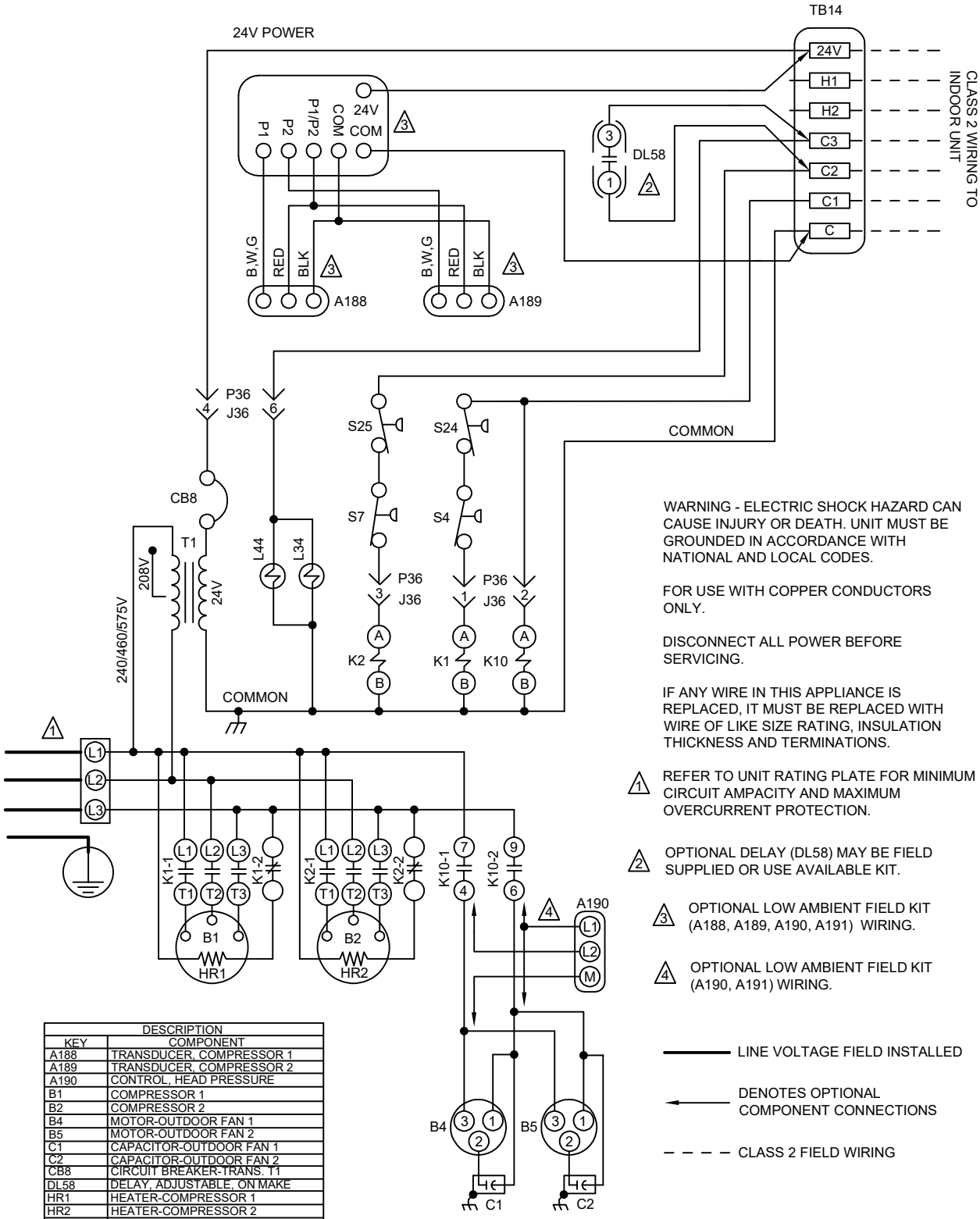

WARNING - ELECTRIC SHOCK HAZARD CAN CAUSE INJURY OR DEATH. UNIT MUST BE GROUNDED IN ACCORDANCE WITH NATIONAL AND LOCAL CODES.

FOR USE WITH COPPER CONDUCTORS ONLY.

DISCONNECT ALL POWER BEFORE SERVICING.

IF ANY WIRE IN THIS APPLIANCE IS REPLACED, IT MUST BE REPLACED WITH WIRE OF LIKE SIZE RATING, INSULATION THICKNESS AND TERMINATIONS.

1 REFER TO UNIT RATING PLATE FOR MINIMUM CIRCUIT AMPACITY AND MAXIMUM OVERCURRENT PROTECTION.

2 OPTIONAL DELAY (DL58) MAY BE FIELD SUPPLIED OR USE AVAILABLE KIT.

3 OPTIONAL LOW AMBIENT FIELD KIT (A188, A189, A190, A191) WIRING.

4 OPTIONAL LOW AMBIENT FIELD KIT (A190, A191) WIRING.

LINE VOLTAGE FIELD INSTALLED

DENOTES OPTIONAL COMPONENT CONNECTIONS

CLASS 2 FIELD WIRING

DESCRIPTION	
KEY	COMPONENT
A188	TRANSDUCER, COMPRESSOR 1
A189	TRANSDUCER, COMPRESSOR 2
A190	CONTROL, HEAD PRESSURE
B1	COMPRESSOR 1
B2	COMPRESSOR 2
B4	MOTOR-OUTDOOR FAN 1
B5	MOTOR-OUTDOOR FAN 2
C1	CAPACITOR-OUTDOOR FAN 1
C2	CAPACITOR-OUTDOOR FAN 2
CB8	CIRCUIT BREAKER-TRANS. T1
DL58	DELAY, ADJUSTABLE, ON MAKE
HR1	HEATER-COMPRESSOR 1
HR2	HEATER-COMPRESSOR 2
J36	JACK-TEST, COOL
K1-1,-2	CONTACTOR-COMPRESSOR 1
K2-1,-2	CONTACTOR-COMPRESSOR 2
K10-1,-2	RELAY-OUTDOOR FANS 1, 2
L34	SOLENOID, TWO STAGE, COMP. 1
L44	SOLENOID, TWO STAGE, COMP. 2
P36	PLUG-TEST, COOL
S4	SWITCH-LIMIT, HI-PRESS. COMP. 1
S7	SWITCH-LIMIT, HI-PRESS. COMP. 2
S24	SWITCH-LOSS OF CHARGE, COMP. 1
S25	SWITCH-LOSS OF CHARGE, COMP. 2
T1	TRANSFORMER-CONTROL
TB2	TERMINAL STRIP-UNIT
TB14	TERMINAL STRIP-CLASS 2 VOLTAGE

2024/07	WIRING DIAGRAM 538295-02	07/24
DUAL SPEED COMPRESSOR		
ELITE AIR CONDITIONERS 120-G,J,Y		
SECTION A 3		REV. 0
Supersedes 538295-01	New Form No. 538295-02	